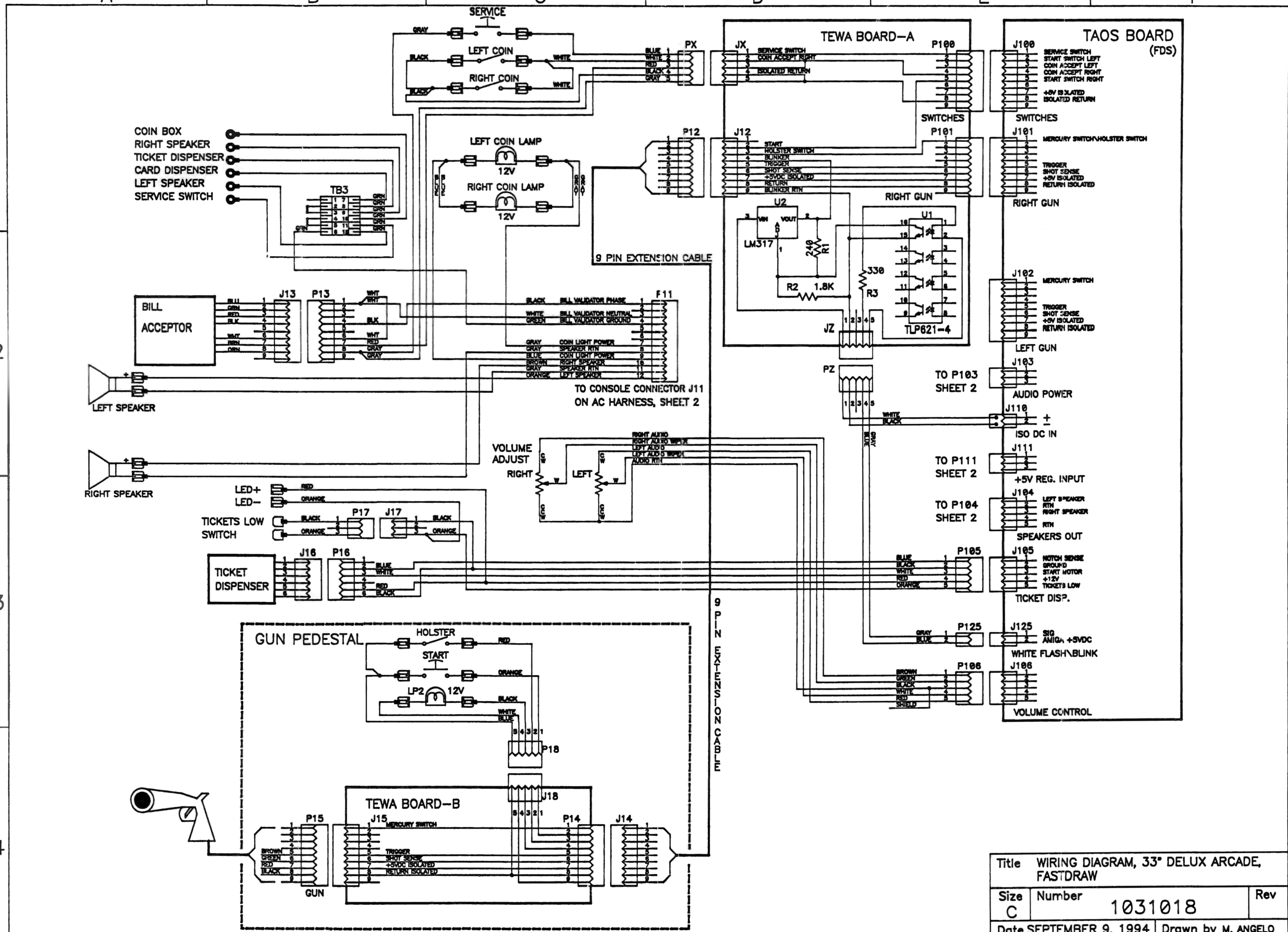

Title	WIRING DIAGRAM, 33" DELUX ARCADE, FASTDRAW	
Size C	Number 1031018	Rev
Date SEPTEMBER 9, 1994	Drawn by M. ANGELO	
Filename FDWDDC33.S01\L01	Sheet 1 of 4	

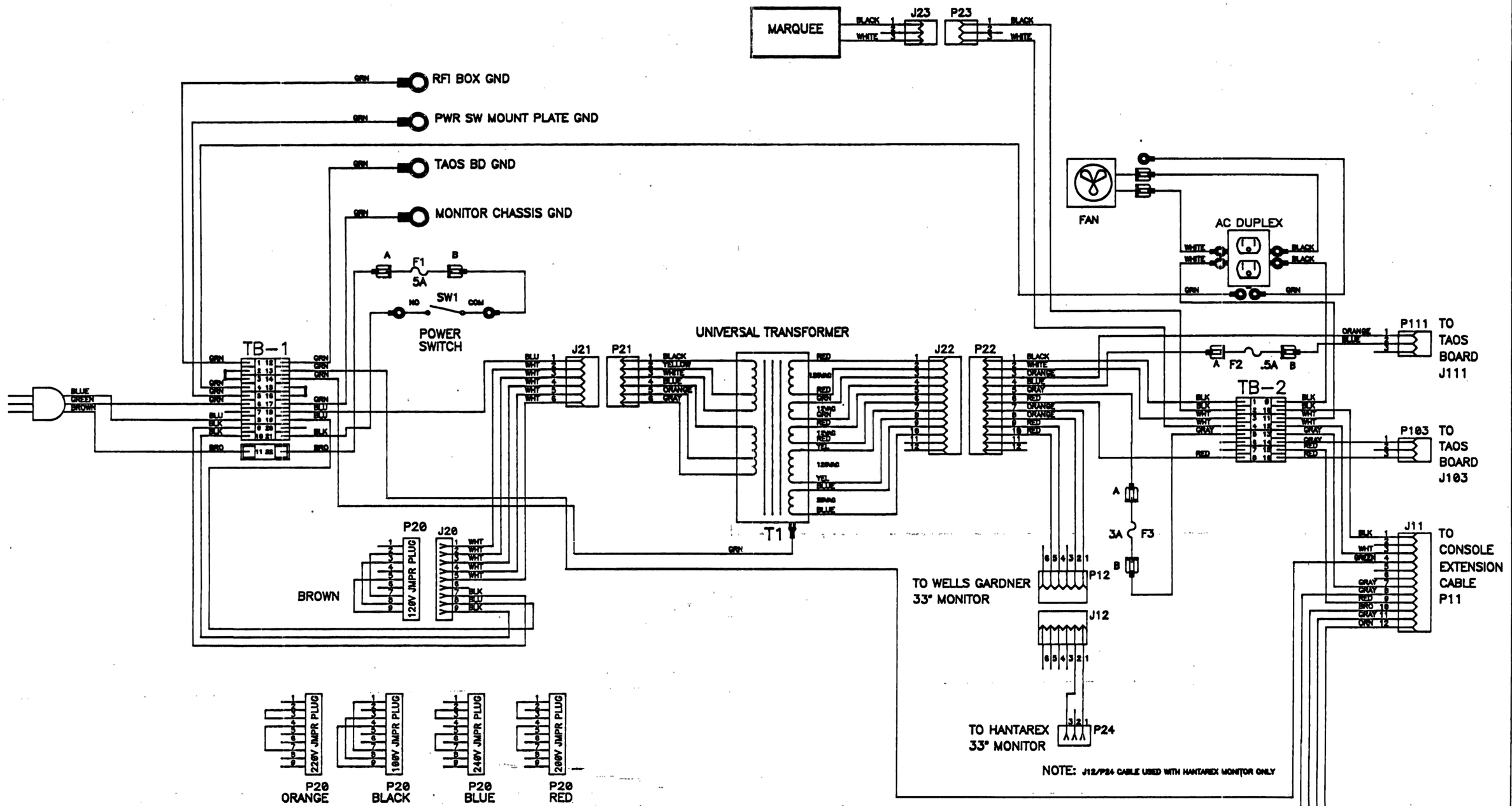

Title	WIRING DIAGRAM, AC HARNESS 33" ARCADE CABINET	
Size C	Number 1031012	Rev
Date SEPTEMBER 8, 1994	Drawn by M. Angelo	
Filename FDWDAC33.S01	Sheet 2 of 4	

1	TB1		AC INPUT CONNECTOR
			QTY 5, DUAL WAGOBLOCKS, WAGO 260-331
			QTY 1, SINGLE WAGOBLOCK, WAGO 260-301
			QTY 1, EURO BLOCK END PLATE, WAGO 260-361
			QTY 2, EURO JUMPERS, WAGO 260-402
2	J20		CONNECTOR, RECEPTICLE, 3X3, .062", MOLEX 03-06-1062
			QTY 8, MOLEX 02-026-1103, TERMINALS
3	J21		CONNECTOR, RECEPTICLE, 2X3, .062", MOLEX 03-06-1092
			QTY 6, MOLEX 02-06-1103, TERMINALS
4	P22		CONNECTOR, PLUG, 3X4, .062", MOLEX 03-06-2122
			QTY 10, MOLEX 02-06-2103, TERMINALS
5	TB-2		AC OUTPUT TERMINAL BLOCK
			QTY 4, DUAL WAGO BLOCKS, WAGO 260-331
6	P111,103		QTY 1, WAGO BLOCK ENDPLATE, WAGO 260-361
			CONNECTOR, 1X3, TERMINAL HOUSING, .156", MOLEX 09-50-3031
			QTY 6, CRIMP TERMINAL, .156", TYPE KK, MOLEX 08-50-0106
7	P12		CONNECTOR, 6 PIN, SHELL, AMP /4-0350715-1
			QTY 4, AMP/350851-1 TERMINALS
8	J11		CONNECTOR, 3X4, RECEPTICLE, .093", MOLEX 03-09-1126
			QTY 10, CRIMP TERMINAL, .093", MOLEX 02-09-1119
9	J23		CONNECTOR, RECPTICLE, 1X3, .093, MOLEX 03-09-1032
			QTY 2, CRIMP TERMINAL, .093", MOLEX 02-09-1119
10	P104		CONNECTOR, RECPTICLE, 1X5, .156", MOLEX
			QTY 4, CRIMP TERMINAL, .156", TYPE KK, MOLEX
11			QTY 14, LUG, RING TERMINAL, #8, 22-18 AWG
12			QTY 6, LUG, FEMALE SPADE, .25", WITH SHRINK TUBING
13			QTY 2, LUG, FEMALE SPADE, .125", WITH SHRINK TUBING
14			AC DUPLEX RECEPTICLE
15			AC DUPLEX RECPTICLE BOX
16			AC DUPLEX RECEPTICLE COVER
17		ALG 1030005	QTY 3, FUSE HOLDER
18			QTY 1, FUSE 1/2 AMP
19			QTY 1, FUSE 2 AMP
20			QTY 1, FUSE 5 AMP
21			QTY 3, FUSE COVER, RICHO PLASTIC P/N 840832
22		ALG 1030008	AC PUSH BUTTON SWITCH
23		ALG 1020008	TRANSFORMER, UNIVERSAL
24			AC BOARD, 20.5" X 5.5" X .75", PINE WOOD BOARD
25			QTY 9, SCREWS, #6 X .5"

Title	PARTS LIST, AC WIRE HARNESS, 33" FASTDRAW ARCADE	
Size C	Number	Rev
Date SEPTEMBER 8, 1994	Drawn by A. R. TIST	
Filename FD33BMAC.S01/L01	Sheet 3 of 4	

ITEM	DESIGNATOR	PART NUMBER	DESCRIPTION
1	PZ,P18,PX,		TERMINAL HOUSING, 1X5, .156", MOLEX 09-50-3051
	P105,P106		QTY 24, CRIMP TERMINAL, .156", TYPE KK, MOLEX 08-50-0106
2	P16		TERMINAL HOUSING, 1X6, .156", MOLEX 09-50-3061
			QTY 16, CRIMP TERMINAL, .156", TYPE KK, MOLEX 08-50-0106
3	P125		TERMINAL HOUSING, 1X2, .156", MOLEX 09-50-8023
			QTY 2, CRIMP TERMINAL, .156", TYPE KK, MOLEX 08-50-0106
4	TB3		QTY 3, DUAL WAGO BLOCKS, WAGO 260-331
			QTY 2, WAGO JUMPERS, WAGO 260-402
5	P11		CONNECTOR, PLUG, 3X4, .093", MOLEX 02-09-2118
			QTY 10, CRIMP TERMINAL, .093, MOLEX 02-09-2118
6	J17		CONNECTOR, RECEPTICLE, 1X3, .093", MOLEX 03-09-1032
			QTY 2, CRIMP TERMINAL, .093", MOLEX 02-09-1119
7	P17		CONNECTOR, PLUG, 1X3, .093", MOLEX 03-09-2032
			QTY 2, CRIMP TERMINAL, .093", MOLEX 02-09-2118
8	P13		CONNECTOR, PLUG, 3X3, AMP 172161-1
			QTY 3, CRIMP TERMINAL, MALE, 18AWG, AMP 171638-1
9	P14	ALG 1030030	DUAL VOLUME CONTROL POTS
10			QTY 6, TERMINAL, FAST ON, FEMALE, INSULATED, .110", 22-18 AWG
11			QTY 8, TERMINAL, FAST ON, FEMALE, INSULATED, .187", 22-18 AWG
12			QTY 3, TERMINAL, RING, INSULATED, .175"(#8), HR4267FC
13			QTY 3, TERMINAL, RING, INSULATED, .250", R41505
14			QTY 4, TERMINAL, FAST ON, FEMALE, INSULATED, .250",
15		ALG 2020006	REED SWITCH MOUNTING BRACKET

Title	PARTS LIST, DC WIRE HARNESS, 33" FASTDRAW ARCADE
Size C	Number / Rev
Date SEPTEMBER 8, 1994	Drawn by A. R. TIST
Filename FD33BMDC.S01/L01	Sheet 4 of 4