S T A R C O M

OPERATION MANUAL

Just the beginning--- Dragon's Lair is the first in a long line of interchangeable Starcom packages. Each package fits into the original Starcom unit, making it substantially less expensive to install completely new games in your arcade. With the games sealed in sturdy laser discs, it is possible to save each package and build up an arcade library to be used on your original unit.

Table of Contents

WARRANTY 1

SERVICE PROCEDURES 2

GAME SETUP

Warnings 3

RF Interference 3

Examine Game 3

Location of Controls 4

GAME OPERATION

Power Requirements 5

Installing Laser Disc 5

Unlocking Spindle Mechanism 5

Turning on Game 5

Game Start 6

Player Controls 6

Game Play 6

Bookkeeping 6

GAME ADJUSTMENTS 7

SYSTEM HARDWARE OPERATION 9

DIAGNOSTICS 10

ROUTINE MAINTENANCE 13

PARTS LIST 14

APPENDIX A (SCHEMATICS, BOARD LAYOUTS) 17

WARRANTY

Starcom, Inc. and Cinematronics Incorporated (manufacturer) warrant the goods to be free from defects in material and workmanship under normal use and service for a period of ninety (90) days from the date of shipment from factory. Starcom and Cinematronics make no representation or warranties concerning the goods whether express or implied by operation of law or otherwise, including those of merchantability or fitness for any particular purpose, or with respect of patent infringement, except as may be specifically made herein. Starcom and Cinematronics limit their warranty obligations herein to the repair or replacement of such parts which have been returned to Cinematronics' plant at purchaser's expense and which examination shall disclose to Cinematronics' satisfaction to have been so defective and to the shipment of such repaired or replacement parts to the purchaser F.O.B. the shipping point.

This warranty does not apply to any Starcom or Cinematronics product which has been altered or repaired by unauthorized personnel or service facilities or any products which have had the unit serial number altered or removed.

Upon acceptance of the goods, the purchaser agrees to assume all liability for damages and/or bodily injury by the purchaser or any other person and to hold Starcom Inc. and Cinematronics Incorporated harmless from liability or claims arising from the use of the goods by any person. Purchaser further agrees to indemnify Starcom Inc. and Cinematronics Incorporated from any liability, claim, cause of action or litigation resulting from the use or misuse of the goods by any person.

Parts returned for warranty service must be packaged so that no damage is incurred during the shipment. Full documentation and instructions must accompany returned parts. Parts must be shipped prepaid to:

Cinematronics, Inc.
1841 Friendship Drive
El Cajon, CA 92020

CUSTOMER SERVICE PROCEDURES
FOR AUTHORIZED CINEMATRONIC'S DISTRIBUTORS

It is the desire of Cinematronics, Inc. to provide efficient and courteous service should the need arise. We have a fully staffed Customer Service Department and encourage you to call our toll-free number: (800)-854-2666 for technical assistance between the hours of 8:00 a.m. and 5:00 p.m, California time, Monday through Friday.

In order to provide the very best service possible, the following procedure for ordering or returning parts must be followed:

1. All equipment ordered from Customer Service, whether in or out of warranty, must be placed with a Distributor's purchase order, either by mail or verbally by telephone.

2. Advance replacement items may be obtained only during the term of the warranty and when such items are available, using the same procedure as when ordering parts. When ordering a PCB, please include with your order the game serial number and the number of the PCB you wish replaced.

3. All items received as advanced replacements will, after a period of thirty (30) days, become the property of the Distributor, with applicable charges applied in the event Customer Service has not received the defective item against which the advance replacement was made.

4. The distributor must call this facility for an RMA number prior to returning any item. Please be prepared to provide us with the game serial number and the PCB number when requesting an RMA.

5. In all situations covered above, and in all other situations, the warranty offered by Cinematronics, Inc. is applicable and should be fully understood.

6. Parts returned for service must be packaged so that no damage is incurred during the shipment. Cartons without a prominently displayed RMA number will not be accepted. Full documentation including game serial number, PCB number on outside of package, and reason for return must accompany parts. Ship prepaid to:

Cinematronics, Inc.
Customer Service Department
1841 Friendship Drive
El Cajon, CA 92020

(800)-854-2666 (619)-562-7000

1.0 GAME SET UP

1.1 Warnings

For safety and reliability, Cinematronics does not recommend or authorize any substitute parts or modifications of Cinematronics equipment.

Use of non-Cinematronics parts and modifications of game circuitry may adversely affect game play, or may cause injury and void warranty.

Substitute parts, modifications and non-Cinematronics game "conversions" may void FCC compliance.

This game is protected by Federal copyright, trademark, and patent laws. Therefore, non-Cinematronics game "conversions" or game modules may be illegal under Federal law.

1.2 RF Interference

Cable harness placements and ground strap routing on this game have been designed to keep RF radiation and conduction within levels accepted by FCC regulations. To maintain these levels, reposition harnesses and reconnect ground straps to their original placements if they should be disconnected during maintenance.

1.3 Examine Game

Inspect the outside of the shipping carton and/or game cabinet for shipping damage.

Unlock and set aside back panel. Check circuitry:

Are connectors securely attached? Reconnect any loose connectors. The connectors are keyed - do not force them together. Also, take care not to reverse edge connectors as this can damage PC boards.

Make sure socketed chips are firmly seated.

Unwrap power cord supplied with game. Plug the cord into the receptacle found on the rear of the cabinet. DO NOT PLUG THE GAME INTO THE WALL OUTLET AT THIS TIME.

Observe major subassemblies, such as; monitor, control panel, transformer board, and power supply. Make sure these are securely mounted.

Open the drawer by removing the wing nuts and screws on the sides of the cabinet where the laser disc player is housed. Make sure player is securely mounted.

1.4 Location of Controls

The ON-OFF switch is mounted on the rear of the cabinet next to the AC input receptacle.

The COIN COUNTER is mounted on the operator convenience panel located behind the coin door. This counter is software controlled and counts credits rather than coins. If one game play is 50 cents, then the coin counter would increment for every 2 coins.

The VOLUME controls are also located on the operator convenience panel. There are two volume controls - one for the left channel and one for the right channel (stereo sound).

The CPU board RESET switch is located on the CPU board at the left side of the board where the amplifier heat sinks are located. The CPU board is mounted on the right side of the cabinet when viewed from the rear.

The Laser-disc player COVER-OPEN switch is located on the left-most side of the front panel switches on the player. Power must be on for this switch to operate. Also, the laser disc must be in the reject position before the cover will open.

2.0 GAME OPERATION

2.1 Power Requirements

CAUTION: This game must be plugged into a properly grounded outlet to prevent shock hazard and to insure proper game operation. Do not use a cheater plug or cut off ground pin to defeat the ground through the line cord. Unless specified otherwise, your game was shipped to operate at 115 VAC,60 hz.

2.2 Installing Laser Disc

Power must be turned on momentarily to install the laser disc. After turning power on, push the cover-open switch on the front panel of the laser disc player. If the disc player is in the process of rejecting the disc, you must wait until it has finished before the cover will open. Turn the power off when the cover has been opened. Set the laser disc on to the spindle of the laser disc player with the label side up. Lock the spindle in place by pressing the lock buttons on the spindle. DO NOT try to operate player without locking the disc on the spindle. Doing so will result in damage to the system. When the disc is locked in place, close the cover on the laser disc player.

2.3 Unlocking Spindle Mechanism

When shipping or moving the Starcom game system the spindle mechanism must be locked in place. Failure to do so can result in alignment problems with the laser disc player. When your game is in the desired location, the mechanism must be unlocked to allow the laser disc player to operate. Insert a small flathead screwdriver into the hole just below the cover on the left side of the front of the laser disc player. The locking screw may be accessed from a hole in the front of the cabinet. Turn the screw counterclockwise until it releases. The mechanism is now free. ALWAYS SECURE THE LOCKING SCREW PRIOR TO SHIPPING OR MOVING THE GAME.

2.4 Turning on Game

After installing disc and unlocking spindle mechanism, the power may be turned on. Replace back door and plug in the game. Turn the game on by pulling out on the power switch. A tone should be heard when the game is switched on. There is a 15 second delay at this point. This insures that the disc is in the reject position. At the end of 15 seconds, a second tone will be heard. The laser disc is now playing. After another 15 seconds a third tone will be heard and the game is ready to play. If any of the above events are not observed, unplug the game and go back to the first part of this section of the manual and start over.

2.5 Game start

Insert coins: a sound is produced indicating the acceptance of the coins. Credits are shown on the LED display above the CRT monitor. With 2 or more credits displayed, pressing the 2 player button inititates a 2 player game. A 1-player game may be played when one or more credits are indicated.

2.6 Player controls

Joystick: An eight-position joystick is used to control the movement of the player's character, Dirk. Moving the joystick will send the character in the direction the joystick is pointed. In some instances, moving Dirk to an object will cause him to do something with that object.

Sword Key: Pressing the Sword key will cause Dirk to draw and use his sword.

2.7 Game Play

In Dragon's Lair, Dirk the Daring enters the enchanted castle of an evil wizard to rescue the captured princess. As Dirk fights his way through the monsters and traps the wizard sends against him, he must find the secret passages which lead to the caverns below the castle. There, in a deep dungeon, the princess is held captive in a magic cage guarded by a gigantic dragon. Dirk must ultimately slay the dragon to free the princess.

Dragon's Lair is a unique game in more than just appearance. The variety of adventures offered in it far surpass that of any other game. There is very little repetition in the game play.

Because the monsters and traps to be overcome are constantly changing, it is not possible to list the range of scores awarded for each one. Generally, as Dirk progresses deeper into the castle he will encounter more difficult obstacles and accordingly be awarded more points for overcoming them. There are several elements of game play which are unique to Dragon's Lair. The game is designed to draw the player into the action and make him believe he is personally battling against the wizard's attacks. The graphics and sound used in the game are unsurpassed elsewhere and are two of the key elements which prompt this player involvement.

3.0 GAME ADJUSTMENTS

When the game is turned off, the DIP switches located on the main CPU board may be used to select different options available as outlined in the following tables. Changing the switch selection while the game is turned on has no effect. Factory recommended settings are shown in the table. The game is shipped with these settings.

DIP SWITCH (SW1) (used as test port in playtest mode)

Switch #	rec.	Function
B0	on	Every 8th pass on demo has sound (off) The sound track in the demo mode is only played every eighth time.
B1	on	No sound at all (off = no sound)
B2	on	off = unlimited life
B3	off	off = keyboard feedback enabled
B4	on	unused
B5	on	unused
B6	on	unused
B7	on	reserved for testing

DIP SWITCH (SW2)

Switch #	rec.	Function
A0	on	Credits/coin selection
A1	on	A0 A1
		on on = 2 coins/credit
		off on = 3 coins/credit
		on off = 4 coins/credit
A2	on	Difficulty level one/two (one = on)
A3	on	Playtest on/off (off = playtest) This is used only by the programmers
A4	on	off = 2 credits always
A5	on	Three or five lives (3 = on)
A6	on	off = Pay as you go **
A7	on	Diagnostic on/off (off = diagnostics)

** At the completion of the first third of the game and the second third of the game, each, the player must insert an additional two coins to continue play. Pay as you go can only be used with the 2 coins per credit setting.

4.0 SYSTEM HARDWARE OPERATION

The Starcom system is controlled by a Z80A microprocessor. It runs at a 4Mhz clock rate. It can be reset manually by the reset switch located on the main CPU board.

The system memory consists of RAM and EPROM. The RAM is on the main CPU board. The EPROM is on the piggybacked board. The Z80A is buffered from the rest of the system by uni- and bi-directional buffers.

Sounds are generated by a General Instruments sound chip AY-3-8910. Its output is mixed with the laser disc players audio out and then fed into two LM383 audio amps.

The keyboard inputs are buffered by two 74LS244's. These inputs are filtered to help prevent noise.

The security device must be installed for the system to work properly. Tampering with this device can be fatal to the system.

5.0 DIAGNOSTICS

The diagnostics is a series of tests performed on the systems hardware to verify that the hardware is fully functional. The diagnostic routines are initiated by having dip switch 1 (position 8) set in the "on" position when the power is turned on. The diagnostic software is resident in the Z80A game program EPROM.

5.1 RAM Test

Each RAM cell is loaded with 55H and then read to insure that all cells retained the data. The RAM is then reloaded with 0AAH. This inverts every bit in every cell. The RAM is then read again to verify data retention. If all cells are operating properly, then the diagnostics will proceed to the EPROM check. If a bad cell is found, the system will display "RAM test failed" on the monitor. The system will stay there until it receives a reset.

5.2 EPROM Test

There are 5 8K-byte EPROMS within the system. The diagnostics calculates each EPROMs checksum and then compares it to the prestored correct checksum values. If all checksums verify the diagnostics continues with the security device test. If a EPROM fails the monitor will display "ROM Test Failed" and will show the address location of the bad EPROM. The address locations are given in the following table:

Checksum #:	address location	EPROM address
Checksum 1:	0FFF6H	0000H-1FFFH
Checksum 2:	0FFF8H	2000H-3FFFH
Checksum 3:	0FFFAH	4000H-5FFFH
Checksum 4:	0FFFCH	6000H-7FFFH
Checksum 5:	0FFFEH	8000H-9FFFH

5.3 Security Device Test

After the Security device goes thru its check, it will continuously put out a 33msec clock to the Z80 interrupt. The diagnostics will put itself in a 50msec delay loop and then check at the end of that loop to see if the security device has interrupted the Z80. If not, the system will display "68705 Test Failed". If the interrupt is being generated, the system will go to the sound test.

5.4 Sound Test

The sound test outputs a tone scale to each of the three channels of the sound chip. The user is instructed to check volume control. The sound chip gives no feedback to the Z80 so the user is given audio feedback. If no sound is heard, the user should check the AY-3-8910 sound chip. The diagnostics goes to the display test next.

5.5 Display Test

The seven segment displays are cycled thru all the digits available. It first starts with 0's and steps thru to all 9's. Again no feedback is available to the Z80 so the user must check to see that the number combinations are okay. The program next goes to the keyboard check.

5.6 Keyboard Test

The keyboard test lasts for 15 seconds. During this 15 seconds the user can push any key on the keyboard and the corresponding digit will flash a zero on the seven segment display. The monitor will show which digit corresponds to each key as shown in the diagram below. After 15 seconds the monitor will explain the colorbar sequence.

Player 1 Score

	ACTION	RIGHT	LEFT	DOWN	UP	

Player 2 Score

P2	P1	COIN1	COIN2			

5.7 Colorbars

The diagnostics will now display colorbars on the monitor. These colorbars will stay on the monitor until the diagnostics dip switch is turned off. When the diagnostics switch is turned off the system will start the game. These colorbars are used to adjust the video monitor.

ROUTINE MAINTENANCE AND SERVICE

Because of the solid state electronic circuitry, this game should require very little maintenance and only occasional adjustments. However, it is necessary to take measures to ensure this.

The video monitor has been properly adjusted before shipping. Occasionally minor adjustments are necessary. See monitor specifications and schematics for technical information. Adjustment controls for the monitor are located at the rear of the monitor.

The Power Supply has also been adjusted before shipping. The computer board in this game operates most efficiently and reliably when the power supply is set so that the voltage on the board is 5.0 volts. To check this, place a meter across 5 volts and ground at the edge connector. If necessary, adjust the screwdriver control on the power supply so the meter reads between 4.9 and 5.1 volts.

This game should only be serviced by a qualified technician.

For service information, contact:

Cinematronics, Inc.
1841 Friendship Drive
El Cajon, CA 92020
(619) 562-7000

DRAGON'S LAIR

PARTS LIST

01-10505-01		LAMP, FLUORESCENT	1
02-12092-01		VIDEO DISC, DRAGON'S LAIR	1
20-10862-01		BRKT,COIN BOX TONG,SC	1
20-10864-01		HANDLE,COIN BOX,SC	1
20-10871-01		COIN BOX,SC	1
20-10872-01		COVER,COIN BOX,SC	1
20-11382-01		GRILL, SPEAKER, SQ	2
20-11420-01		RAIL, CRT MNTG, CKTL, UNIVERSAL	2
20-12066-01		RETAINER,UPPER MARQUEE C.C.	1
20-12067-01		RETAINER,LOWER MARQUEE C.C.	1
21-10831-01		BEZEL,CRT,FORMED,SC	1
21-12138-01		PLEXI,REAR,SCORE,DRAGON'S LAIR	1
21-12139-01		PLEXI,MONITOR,DRAGON'S LAIR	1
26-10588-01		FIXTURE, LAMP, FLUORESCENT	1
32-12100-01	A	CABINET,UPRIGHT,DL	1
38-11701-01		ASSY,POWER PLATE,STARCOM	1
20-11606-01		PLATE, MNTG, P/S, TRANS	1
25-10551-01		BOLT,CARRIAGE,3/16"X1/2" BLACK O	8
25-11607-01		STAND-OFF,NYLON,LOCKING,DLCBS-14	4
25-11612-01		WASHER,LOCK 8	8
25-11613-01		NUT, 8-32	8
38-11723-01		ASSY, TRANS ISOL RAVENSW	1
43-11704-01		TRANS, ISOL RAVENSWOOD 105P9	1
87-11688-01		ASSY, HARN TRANS/MON JG	1
87-11767-01		ASSY, HARN, TRANS GND	1
87-11768-01		ASSY, HARN TRANS/PS	1
82-10842-30		P/S, DATA POWER	1
38-11863-01		MONITOR,19" COLOR,HORIZONTAL,NTS	1
38-12065-01		ASSY,CNTL PANEL,DRAGON'S LAIR	1
20-11972-01		CNTRL PANEL,DRAGON'S LAIR	1
22-12066-01		DECAL,LEXAN,DRANGON'S LAIR CNTL	1
25-10551-01		BOLT,CARRIAGE,3/16"X1/2" BLACK O	4
25-10558-01		NUT,HEX, 10-24	4
25-10559-01		NUT,PAL 5/8"	4
25-10572-01		WASHER, LOCK, 10 INT	4
37-11192-01		BUTTON, SHORT, WHITE, COCKTAIL	2
37-11192-02		BUTTON, SHORT, RED	2
37-11373-01		SWITCH, W/PLASTIC MNTG BRKT,SHOR	4
38-11396-01		ASSY,JOYSTICK,8 POS,LEAFSWITCH	1
87-11679-11		ASSY,HARNESS,CNTL PANEL,STARCOM	1
87-11679-01P		ASSY, HARN CTL PNL JG	1
38-12071-01		ASSY,MARQEE,DRAGON'S LAIR	1
21-12069-01		PLEXI,MARQUEE	1
22-12098-01		DECAL,LEXAN,MARQUEE,DRAGON'S LAI	1
38-12080-01		ASSY,OPERATOR CONVINIENCE PANEL,	1
20-12078-01		BRKT,OPERATOR CONVIENCE PNL	1
25-10557-01		NUT,HEX, 6-32	4
25-10559-01		NUT,PAL 5/8"	1

DRAGON'S LAIR
PARTS LIST

25-10563-01	SCREW,MACHINE, 6-32X1/2"PAN.HD.P	4
25-10571-01	WASHER, LOCK, 6 INT	4
25-10582-01	TUBING, SHRINK,3/16" RCLL STK,BL	0
26-10589-01	KNOB, VOLUME	2
29-11754-01	METER,COIN 6 VOLT(REISU NR-06)	1
51-10722-01	POT, W.LK. WASHER/NUT, 10K OHM	2
53-11591-01	RES,68 OHM 5W 5% C.	1
65-10812-01	DIODE,1N4003,ENCPL	1
87-12084-01	ASSY,HARNESS OP.CONV.PNL. C.C.	1
38-12081-01	ASSY,AC INPUT PANEL,STARCOM	1
20-12093-01	PLATE,AC INPUT PANEL,STARCOM	1
37-10893-01	SWITCH, INTERLOCK	1
63-12131-01	FILTER,AC LINE,GCM3N1P (GENISCO)	1
38-12087-01	ASSY,COIN DOOR 68000	1
20-10896-11	COIN DOOR W/LAMPS CKTL SC	1
22-10899-01	DECAL, "CINEMATRONICS"	1
25-10579-01	TY RAP, W/O EYELET	1
25-10905-01	CLAMP,CABLE 3/16",PLASTIC	4
87-12085-01	ASSY,HARNESS COIN DOOR 68000	1
38-12088-01	ASSY,CIRCUT PANEL,STARCOM	1
20-12092-01	PLATE,CIRCUT MOUNTING STARCOM	1
81-12035-01	PCA,MAIN BOARD,STARCOM	1
20-10520-01	HEAT SINK,THERMALLOY 6071B	2
20-10521-01	HEAT SINK,THERMALLOY 6072B	2
20-10537-01	HEATSINK,THERMALLOY 6060	1
36-10621-01	SOCKET,24 PIN, I.C.,DIP SOLDERTA	1
36-11547-01	SOCKET,DIP 28CIR	1
36-11784-01	SOCKET, 40 PIN DIPTAIL	1
37-12050-01	SWITCH,DIP 8POS.GRAYHILL(8142)	2
41-10652-01	CONN, 16 CIR, M HEADER	1
41-11895-01	CONN,40 CIR,M HEADER	1
41-12113-01	CONN,36 PIN BODY MOLEX 03-06-236	1
41-12114-01	PINS,SOLDER,MOLEX 02-06-8103	36
44-10673-01	IC,7815-C	1
44-10677-01	IC,74LS00	2
44-10679-01	IC,74LS04	1
44-10680-01	IC,74LS08	1
44-10697-01	IC,74LS393	2
44-11028-01	IC,74LS74	2
44-11029-01	IC,74LS138	3
44-11486-01	IC,74LS244	9
44-11487-01	IC,74LS245	2
44-11492-01	IC,74LS374	2
44-11833-01	IC,Z80A (4 MHZ)	1
44-11890-01	IC,4016(200NS)	1
44-12053-01	IC,AY-3-8910 (GI)	1
44-12055-01	IC,LM383 (NS)	2
44-12056-01	IC,MC68705 (MOT)	1
53-10731-01	RES,330 OHM 1/4W 5% C.	3
53-10734-01	RES,1K OHM 1/4W 5% C.	17
53-10743-01	RES,4.7K OHM 1/4W 5% C.	1
53-10746-01	RES,10K OHM 1/4W 5% C.	1
53-10771-01	RES,360 OHM 1W 5% C.	1

DRAGON'S LAIR
PARTS LIST

53-10920-01		RES,5.1K OHM 1/4W 5% C.	1
53-11044-01		RES,510 OHM 1/4W 5% C.	1
53-11684-01		RES, 220 OHM 1/4 W 5% C	19
53-12115-01		RES,2.2 OHM 1/4W 5% C.	2
63-10782-01		CAP,.01MF 50V DISC 20%	1
63-10784-01		CAP,.1MF 50V DISC 20%	33
63-10940-01		CAP,.001MF 50V DISC 20%	1
63-11042-01		CAP, 470MF 35V ELEC	8
63-11127-01		CAP, 1.0MF 50V ELEC RAD	15
63-11128-01		CAP, 22MF 50V ELEC RAD	2
63-11370-01		CAP, 10MF 50V ELEC	3
63-11393-01		CAP,330PF 50V SILVER MICA	1
63-12130-01		CAP,0.2MF 50V CERAMIC DISC, 20%	4
65-10812-01		DIODE,1N4003,ENCPL	2
65-10993-01		DIODE,1N914	2
66-10816-01		TRANSISTOR,NPN 2N3904	1
66-10817-01		TRANSISTOR,PNP 2N3906	1
66-10823-01		TRANSISTOR,NPN 2N5878	1
69-12064-01		CRYSTAL,4.00 MHZ	1
80-12035-01		PCB,MAIN LOGIC,STARCOM	1
81-12056-01		PCA,ROM,STARCOM	1
02-12091-01		EPROM,2764,250 NS,U1,DRAGON'S LA	1
02-12091-02		EPROM,2764,250 NS,U2,DRAGON'S LA	1
02-12091-03		EPROM,2764,250 NS,U3,DRAGON'S LA	1
02-12091-04		EPROM,2764,250 NS,U4,DRAGON'S LA	1
02-12091-05		EPROM,2764,250 NS,U5,DRAGON'S LA	1
36-11547-01		SOCKET,DIP 28CIR	5
41-11895-01		CONN,40 CIR,M HEADER	1
63-10784-01		CAP,.1MF 50V DISC 20%	5
63-11042-01		CAP, 470MF 35V ELEC	1
80-12056-01		PCB,ROM,STARCOM	1
87-12093-01		ASSY,R.CBL.40CIR 3"	1
38-12128-01	A	ASSY,DISC PLAYER IN DRAWER	1
20-10868-12		BRACKET,DRAWER,STARCOM	2
20-10868-11		BRKT, SHORT VOL. CTL/COUNTER	2
25-12130-01		SHOCK ISOLATOR,7821-2A-T3 (BARRY	4
38-12127-01		LASER DISC PLAYER,PR7820	1
71-10834-01		SPEAKER,	2
81-12036-01		PCA,DISPLAY,STARCOM	1
41-10652-01		CONN, 16 CIR, M HEADER	1
44-12054-01		IC,ICM7218D (INTERSIL)	2
63-10784-01		CAP,.1MF 50V DISC 20%	2
63-11042-01		CAP, 470MF 35V ELEC	1
65-11533-01		LED,MAN8940 (MONSANTO)	16

80-1

PROPRIETARY
THIS DOCUMENT IS THE PROPERTY OF CINEMATRONICS INC AND IS NOT TO BE REPRODUCED OR DISTRIBUTED WITHOUT WRITTEN AUTHORIZATION OF CINEMATRONICS INC.

REVISIONS			
REV	DESCRIPTION	DATE	APPROVED

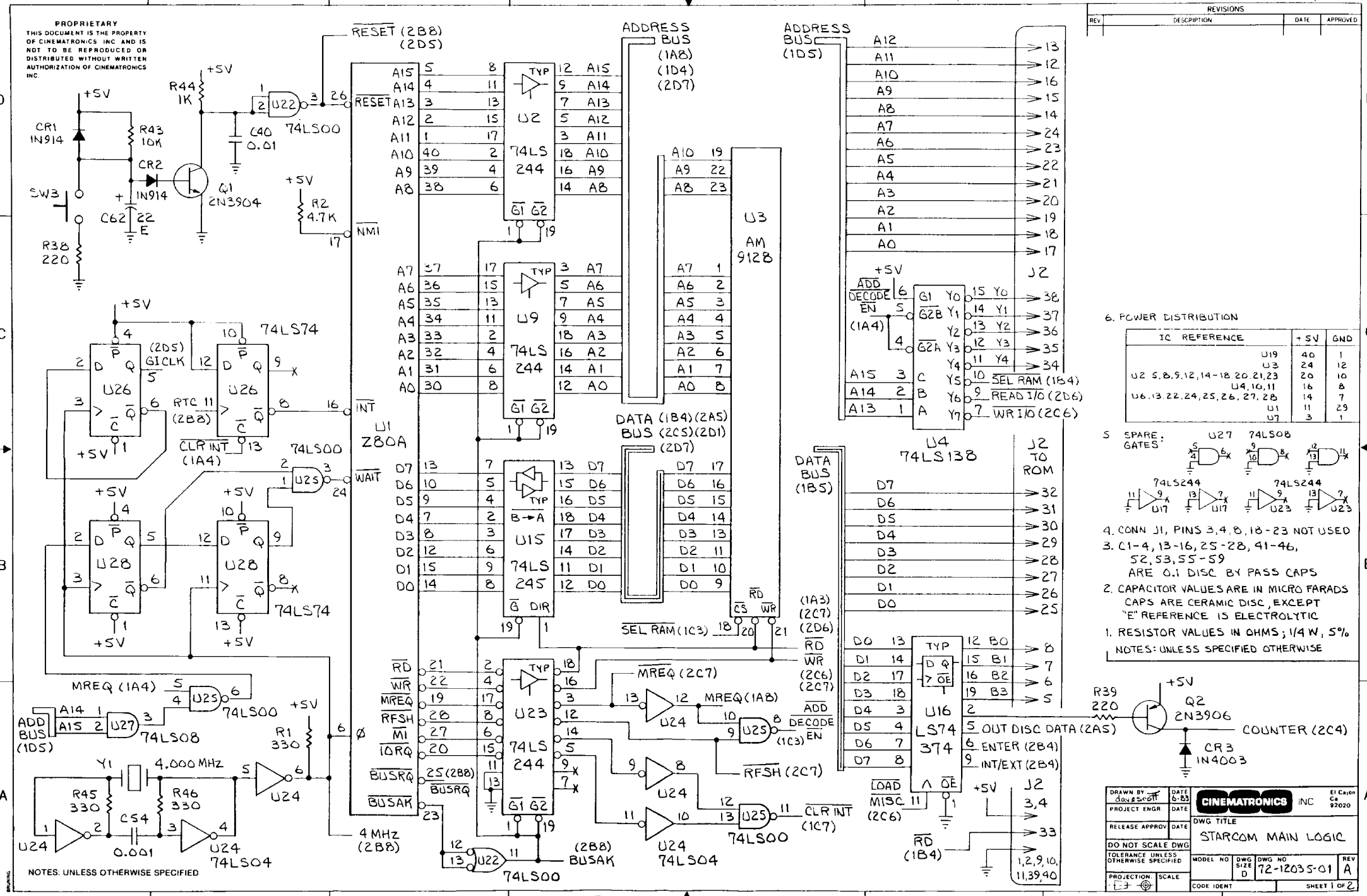

6. POWER DISTRIBUTION

IC REFERENCE	+5V	GND
U19	40	1
U3	24	12
U2 5,8,9,12,14-18,20,21,23	20	10
U4,10,11	16	8
U6,13,22,24,25,26,27,28	14	7
U1	11	29
U7	3	1

5 SPARE GATES: U27 74LS08; 74LS244 U17; 74LS244 U23

4. CONN J1, PINS 3,4,8,18-23 NOT USED
3. C1-4, 13-16, 25-28, 41-46, 52, 53, 55-59 ARE 0.1 DISC BY PASS CAPS
2. CAPACITOR VALUES ARE IN MICRO FARADS CAPS ARE CERAMIC DISC, EXCEPT "E" REFERENCE IS ELECTROLYTIC
1. RESISTOR VALUES IN OHMS; 1/4 W, 5%
NOTES: UNLESS SPECIFIED OTHERWISE

NOTES: UNLESS SPECIFIED OTHERWISE

DRAWN BY: dan & scott	DATE 6-83	CINEMATRONICS INC	El Cajon Ca 92020
PROJECT ENGR.	DATE	DWG TITLE: STARCOM MAIN LOGIC	
RELEASE APPROV	DATE		
DO NOT SCALE DWG			
TOLERANCE UNLESS OTHERWISE SPECIFIED		MODEL NO	DWG SIZE D; DWG NO 72-12035-01; REV A
PROJECTION	SCALE	CODE IDENT	SHEET 1 OF 2

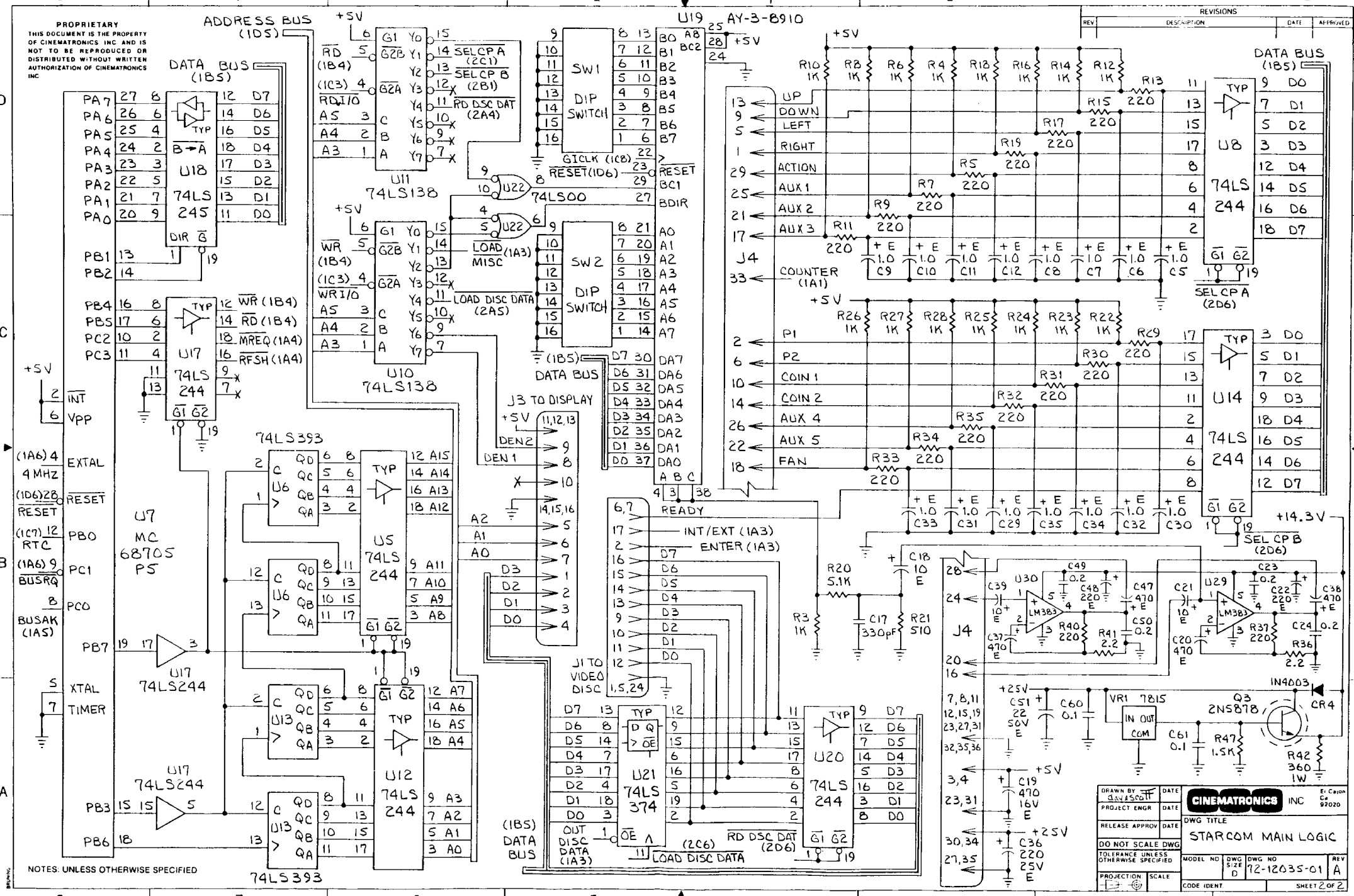
PROPRIETARY
THIS DOCUMENT IS THE PROPERTY OF CINEMATRONICS INC AND IS NOT TO BE REPRODUCED OR DISTRIBUTED WITHOUT WRITTEN AUTHORIZATION OF CINEMATRONICS INC
REVISIONS
REV | DESCRIPTION | DATE | APPROVED
ADDRESS BUS (1D5)
DATA BUS (1B5)
U19 AY-3-8910
U18 74LS 245
U17 74LS 244
U11 74LS138
U10 74LS138
U22 74LS00
SW1 DIP SWITCH
SW2 DIP SWITCH
U8 74LS 244
U14 74LS 244
U7 MC 68705 P5
U6 74LS393
U5 74LS 244
U12 74LS 244
U13 74LS393
U21 74LS 374
U20 74LS 244
J3 TO DISPLAY
J1 TO VIDEO DISC
J4
U30 LM383
U29 LM383
VR1 7815
Q3 2N5878
CR4 IN4003
READY
INT/EXT (1A3)
ENTER (1A3)
LOAD DISC DATA
RD DSC DAT (2D6)
SEL CP A (2D6)
SEL CP B (2D6)
+14.3V
NOTES: UNLESS OTHERWISE SPECIFIED
DRAWN BY dan scott
PROJECT ENGR
RELEASE APPROV
DO NOT SCALE DWG
TOLERANCE UNLESS OTHERWISE SPECIFIED
PROJECTION
SCALE
CINEMATRONICS INC
El Cajon Ca 92020
DWG TITLE
STARCOM MAIN LOGIC
MODEL NO
DWG SIZE D
DWG NO 72-12035-01
REV A
CODE IDENT
SHEET 2 OF 2

PROPRIETARY
THIS DOCUMENT IS THE PROPERTY OF CINEMATRONICS INC. AND IS NOT TO BE REPRODUCED OR DISTRIBUTED WITHOUT WRITTEN AUTHORIZATION OF CINEMATRONICS INC.

REVISIONS			
REV	DESCRIPTION	DATE	APPROVED

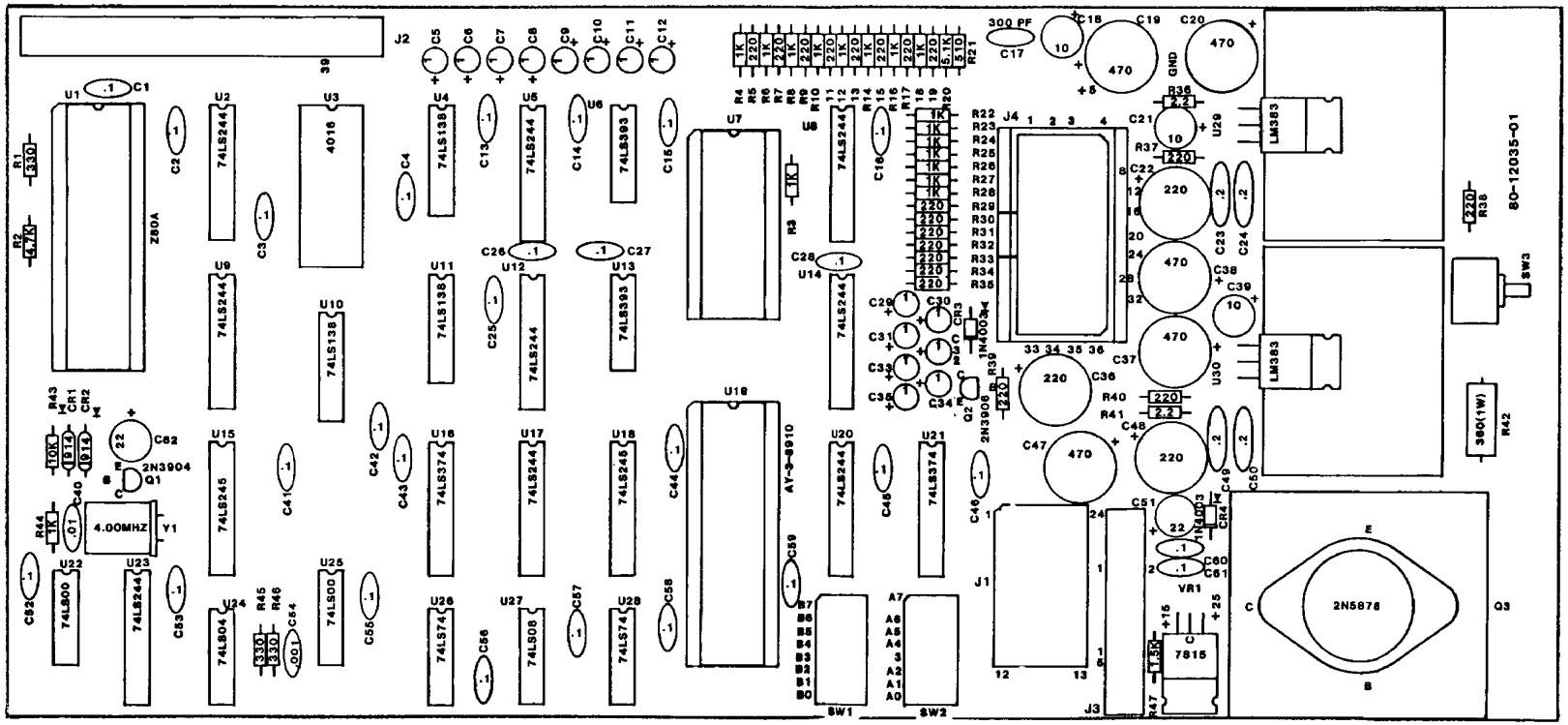

NOTES: UNLESS OTHERWISE SPECIFIED

MATERIAL:	DRAWN BY: MarcoSoft	DATE: 6-83	CINEMATRONICS INC El Cajon Ca 92020
	PROJECT ENGR:	DATE	DWG TITLE: STARCOM MAIN LOGIC
	RELEASE APPROV:	DATE	
FINISH:	DO NOT SCALE DWG		MODEL NO: DWG SIZE D DWG NO 81-12035-01 REV A
	TOLERANCE UNLESS OTHERWISE SPECIFIED		
	PROJECTION:	SCALE:	CODE IDENT: SHEET 1 OF 1

PROPRIETARY
THIS DOCUMENT IS THE PROPERTY OF CINEMATRONICS INC. AND IS NOT TO BE REPRODUCED OR DISTRIBUTED WITHOUT WRITTEN AUTHORIZATION OF CINEMATRONICS INC.

REVISIONS

REV	DESCRIPTION	DATE	APPROVED

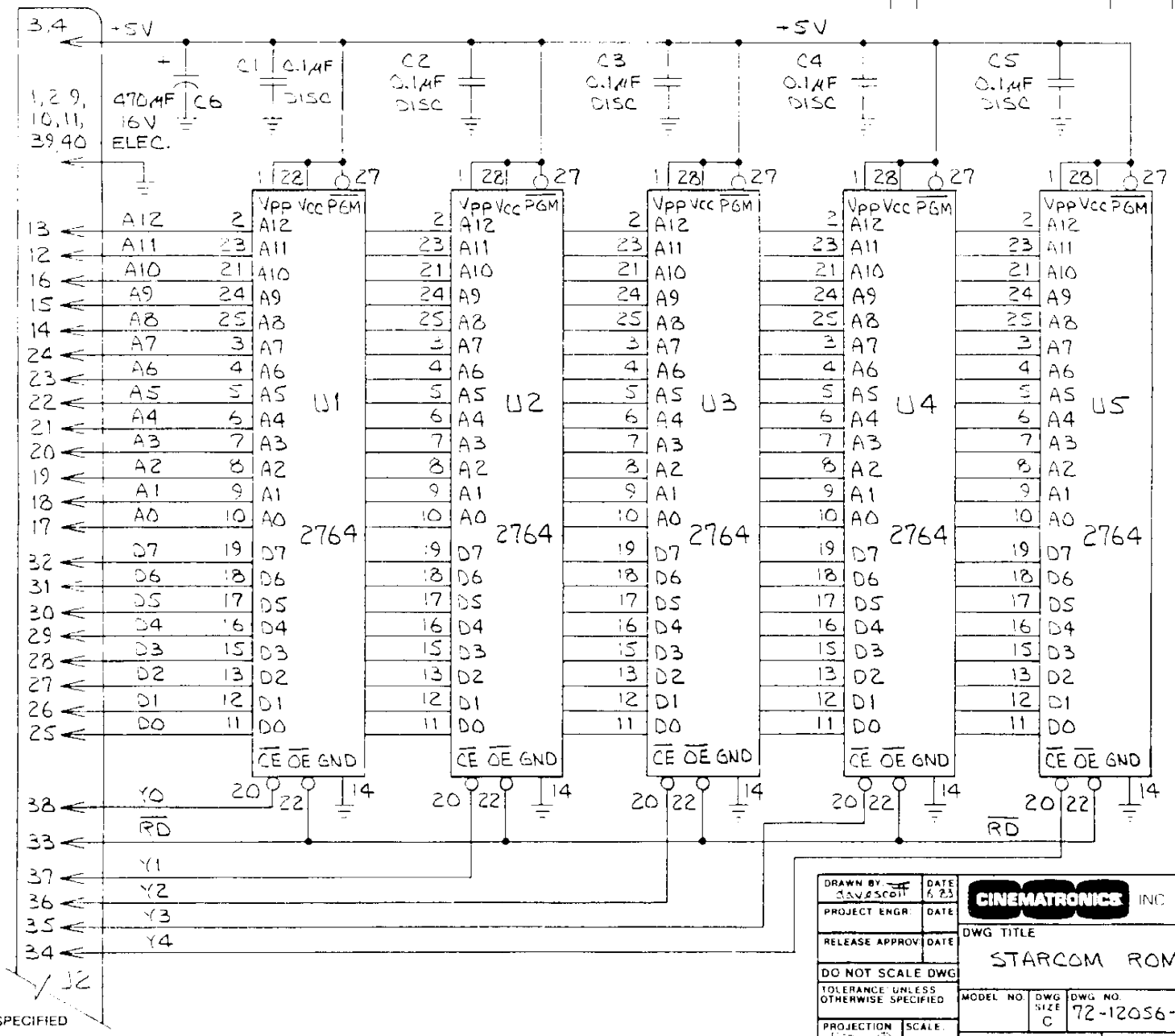

NOTES: UNLESS OTHERWISE SPECIFIED

DRAWN BY: Dave Scott	DATE: 6.23	CINEMATRONICS INC	El Cajon Ca 92020
PROJECT ENGR.	DATE	DWG TITLE: STARCOM ROM	
RELEASE APPROV.	DATE		
DO NOT SCALE DWG			
TOLERANCE UNLESS OTHERWISE SPECIFIED		MODEL NO.	DWG SIZE C: DWG NO. 72-12056-01 REV A
PROJECTION	SCALE	CODE IDENT	SHEET 1 OF 1

PROPRIETARY
THIS DOCUMENT IS THE PROPERTY OF CINEMATRONICS INC. AND IS NOT TO BE REPRODUCED OR DISTRIBUTED WITHOUT WRITTEN AUTHORIZATION OF CINEMATRONICS INC

REVISIONS			
REV	DESCRIPTION	DATE	APPROVED

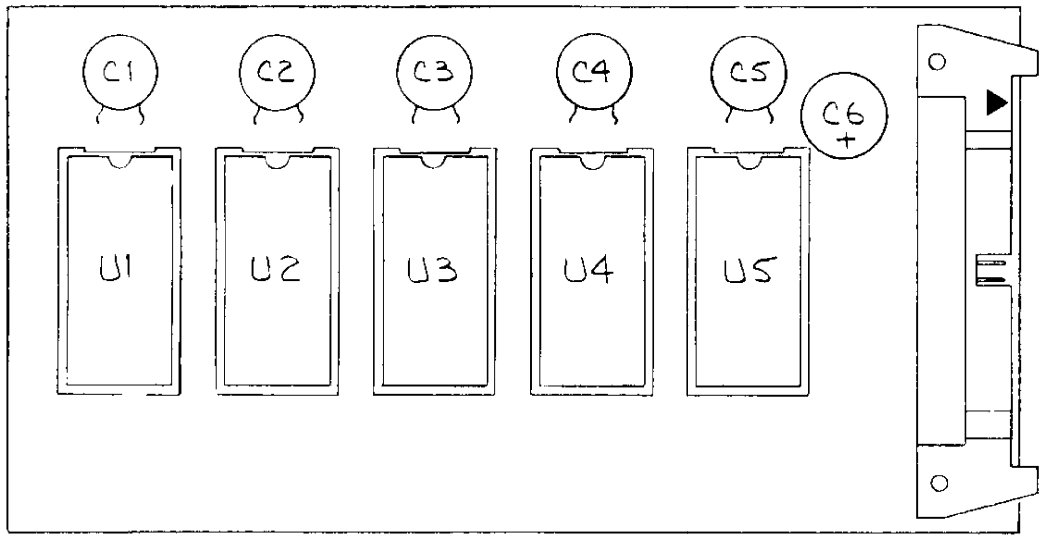

3. DRAGON'S LAIR (81-12056-01): U1-U5, 2764 WITH SOCKET
2. C6 ; 470 µF, 16 V MINIMUM ELECTROLYTIC
1. C1-C5 ; 0.1 µF, 50V DISC

NOTES: UNLESS OTHERWISE SPECIFIED

MATERIAL	DRAWN BY dave scott	DATE 6-83	CINEMATRONICS INC El Cajon Ca 92020
	PROJECT ENGR	DATE	DWG TITLE: STARCOM ROM
	RELEASE APPROV	DATE	
FINISH	DO NOT SCALE DWG		MODEL NO: — DWG SIZE: C DWG NO: 81-12056-XX REV: A
	TOLERANCE UNLESS OTHERWISE SPECIFIED		CODE IDENT: — SHEET 1 OF 1
	PROJECTION	SCALE 2 : 1	

PROPRIETARY
THIS DOCUMENT IS THE PROPERTY OF CINEMATRONICS INC AND IS NOT TO BE REPRODUCED OR DISTRIBUTED WITHOUT WRITTEN AUTHORIZATION OF CINEMATRONICS INC

REVISIONS

REV	DESCRIPTION	DATE	APPROVED

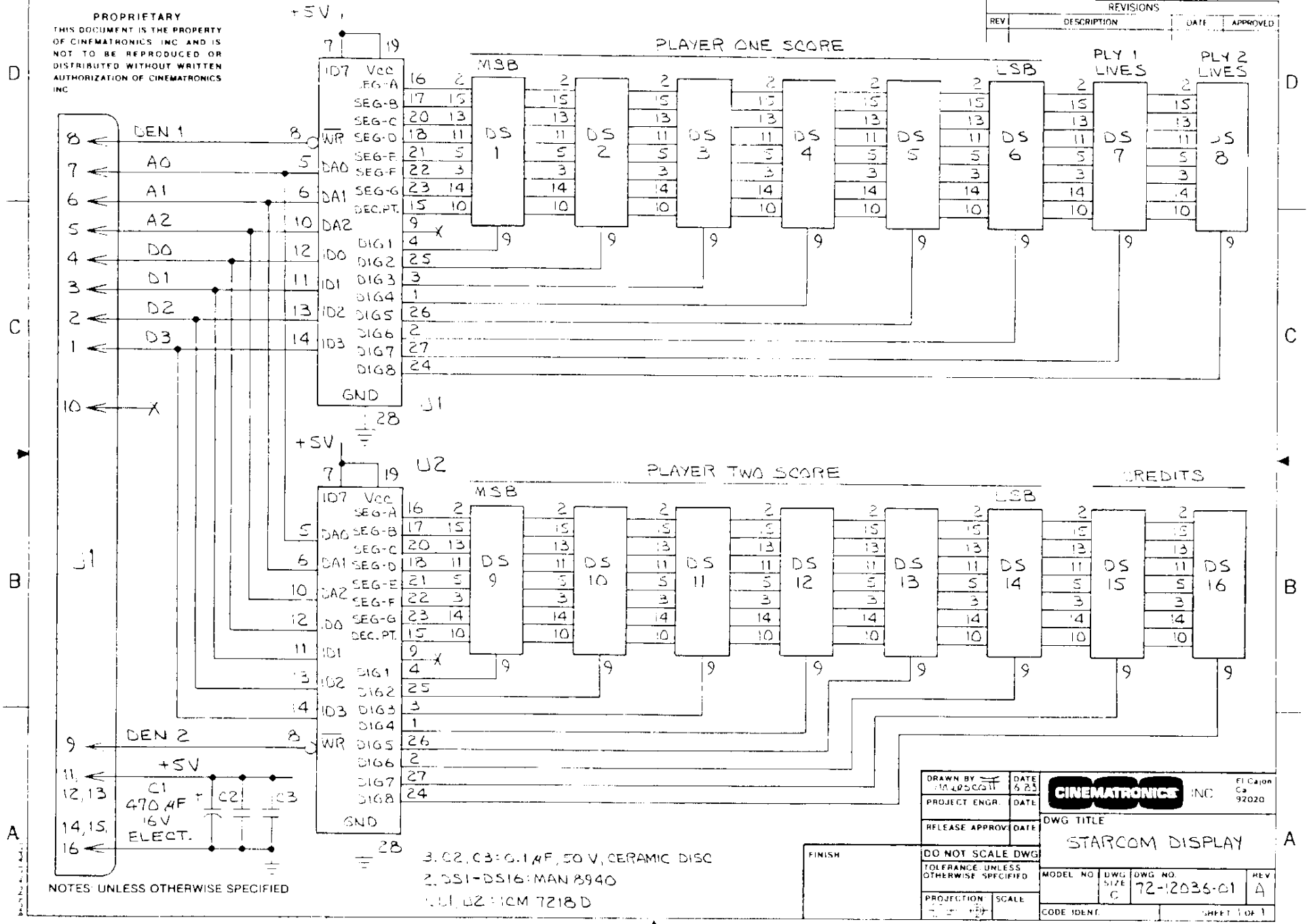

NOTES: UNLESS OTHERWISE SPECIFIED

1. C2, C3: 0.1 µF, 50 V, CERAMIC DISC
2. DS1-DS16: MAN 8940
3. U1, U2: ICM 7218D

DRAWN BY	DATE	CINEMATRONICS INC El Cajon Ca 92020
PROJECT ENGR.	DATE	
RELEASE APPROV	DATE	DWG TITLE: STARCOM DISPLAY
FINISH	DO NOT SCALE DWG	
	TOLERANCE UNLESS OTHERWISE SPECIFIED	MODEL NO. / DWG SIZE C / DWG NO. 72-12036-01 / REV A
	PROJECTION / SCALE	CODE IDENT. / SHEET 1 OF 1

PROPRIETARY
THIS DOCUMENT IS THE PROPERTY OF CINEMATRONICS INC AND IS NOT TO BE REPRODUCED OR DISTRIBUTED WITHOUT WRITTEN AUTHORIZATION OF CINEMATRONICS INC

REVISIONS			
REV	DESCRIPTION	DATE	APPROVED

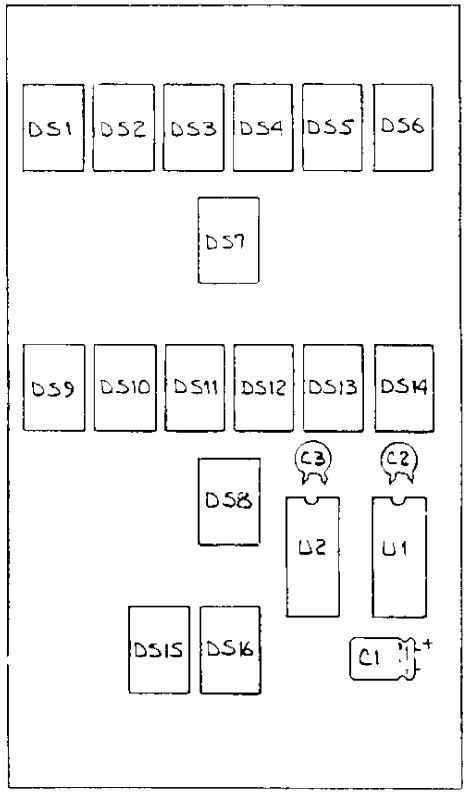

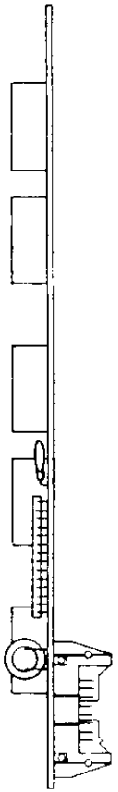

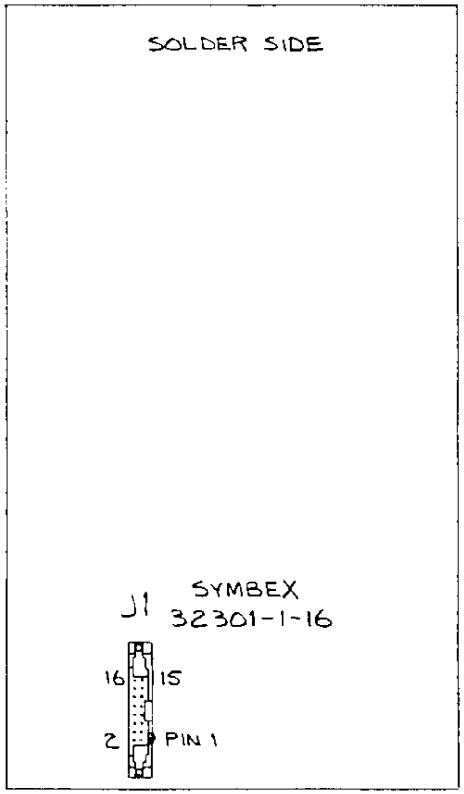

6. CONNECTOR INSTALLED ON SOLDER SIDE OF P.C.B.
5. ALL CAPACITORS TO BE LAYED DOWN
4. C2, C3 : 0.1 μF 50 V DISC 20%
3. C1 : 470 μF ELECTROLYTIC 16 V MINIMUM
2. U1, U2 : ICM 7218 D
1. DS1 - DS16 : L.E.D. MAN8940

NOTES: UNLESS OTHERWISE SPECIFIED

31 MAY 1983

MATERIAL	DRAWN BY: CRAIG SCOTT	DATE	CINEMATRONICS INC, El Cajon Ca 92020
	PROJECT ENGR.	DATE	DWG TITLE: STARCOM DISPLAY
	RELEASE APPROV.	DATE	
FINISH	DO NOT SCALE DWG		MODEL NO: — DWG SIZE: C DWG NO: 81-12036-01 REV: A
	TOLERANCE: UNLESS OTHERWISE SPECIFIED		CODE IDENT: — SHEET 1 OF 1
	PROJECTION	SCALE: FULL	

BRUNING 40-21 40423

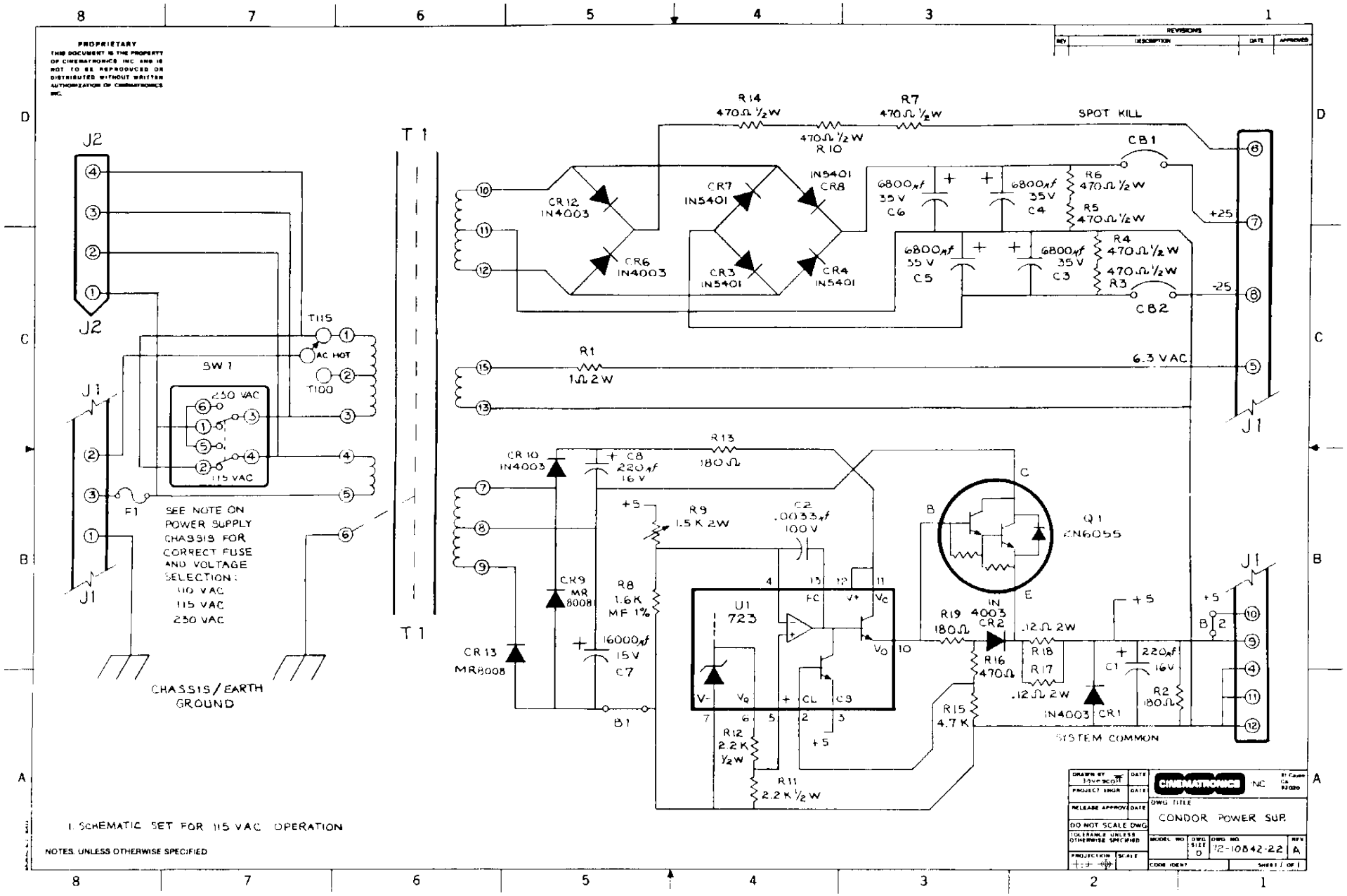
PROPRIETARY
THIS DOCUMENT IS THE PROPERTY OF CINEMATRONICS INC AND IS NOT TO BE REPRODUCED OR DISTRIBUTED WITHOUT WRITTEN AUTHORIZATION OF CINEMATRONICS INC.
REVISIONS
REV
DESCRIPTION
DATE
APPROVED
J2
T1
R14 470Ω ½W
R7 470Ω ½W
470Ω ½W R10
SPOT KILL
CB1
CR12 IN4003
CR7 IN5401
IN5401 CR8
6800μf 35V C6
6800μf 35V C4
R6 470Ω ½W
R5 470Ω ½W
+25
CR6 IN4003
CR3 IN5401
CR4 IN5401
6800μf 35V C5
6800μf 35V C3
R4 470Ω ½W
470Ω ½W R3
-25
CB2
T115
AC HOT
T100
SW1
230 VAC
115 VAC
R1 1Ω 2W
6.3 VAC
J1
F1
SEE NOTE ON POWER SUPPLY CHASSIS FOR CORRECT FUSE AND VOLTAGE SELECTION:
110 VAC
115 VAC
230 VAC
CHASSIS/EARTH GROUND
CR10 IN4003
C8 220μf 16V
R13 180Ω
+5
R9 1.5K 2W
C2 .0033μf 100V
Q1 2N6055
CR9 MR 8008
R8 1.6K MF 1%
U1 723
FC
V+
VC
VO
V-
VR
CL
CS
16000μf 15V C7
CR13 MR8008
B1
R19 180Ω
IN 4003 CR2
.12Ω 2W
R18
R17
.12Ω 2W
R16 470Ω
R15 4.7K
C1 220μf 16V
R2 180Ω
IN4003 CR1
SYSTEM COMMON
B2
R12 2.2K ½W
R11 2.2K ½W
CINEMATRONICS INC
DWG TITLE
CONDOR POWER SUP.
DO NOT SCALE DWG
TOLERANCE UNLESS OTHERWISE SPECIFIED
MODEL NO
DWG SIZE D
DWG NO. 72-10842-22
REV A
CODE IDENT
SHEET 1 OF 1
1. SCHEMATIC SET FOR 115 VAC OPERATION
NOTES: UNLESS OTHERWISE SPECIFIED

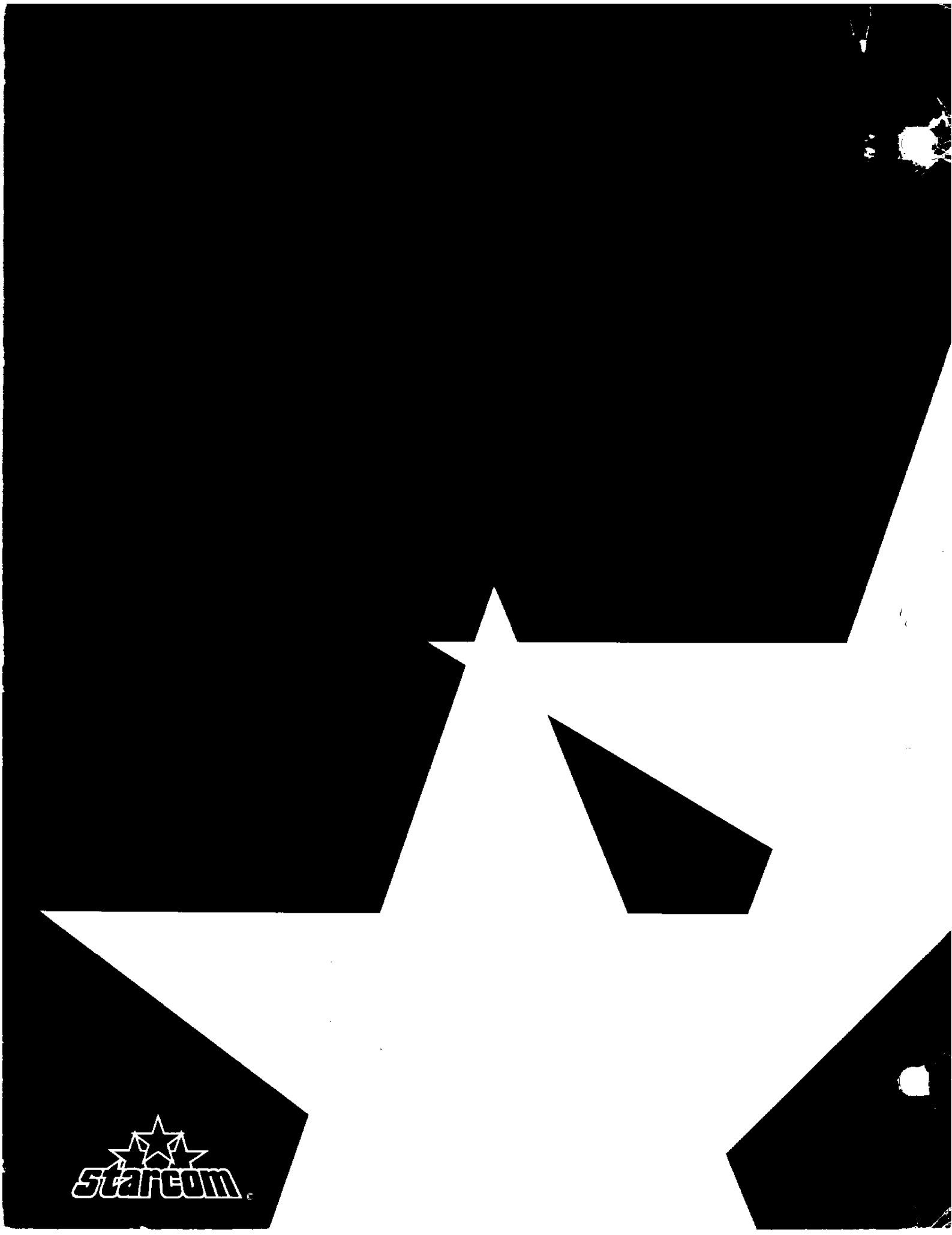
starcom